WASHING

—

HIGH SPIN WASHERS
LOW AND MEDIUM CAPACITY
LA-11/14 TP2

CHARACTERISTICS

TP2
- User friendly and totally programmable 7".
- USB Connection. Online platform free of charge for programming, telemetry, data analysis… thanks to the IoT.
- Videos on display (ads, instructions, etc.).
- 37 languages.
- 8 dosing signals as standard.

G FACTOR
- High G-Factor: G-FACTOR 500 for high spin washers.

EFFICIENCY
- Intelligent consumption.
- Optimal loading.
- Water Recovery tanks ready: KRS.
- Low water consumption.

VERSATILITY
- Make to order: customisation.
- OPL < > COIN.
- Electric < > Hot water.
- Drain valve < > Pump.
- Wet cleaning features.

CONNECTIVITY
- IoT - FagorKonnect standard.
- Remote technical service.
- Managemant of laundries: OPL and COIN.
- Remote payment.

ERGONOMICS
- Biggest door diameters: Ø373.
- Easy opening/closing system for door lock.

MAINTENANCE
- Hinged control panel: easy and ergonomic access.
- Technical menu: statistics for technicians and maintenance with external console (with console option).

OTHERS
- Grey skinplate outer casing.
- Drum and tub in stainless steel AISI 304.
- Detergent dispenser with 4 compartments.
- Electronic control of imbalance with frequency control.
- LOADING AID system: water and rotation control.
- CB and WRAS approved product. Option ETL.
- High spin washers with suspended drum.

OPTIONS

- DQ-2 Dosing pump kit.
- Extra dosing pump DB-1.
- Double drain.
- External double drain 3" (recommended for LA-11).
- Drain pump for models LA-11 and LA-14.
- Normally closed valve.
- Water FULL FLOW recirculation of bath water.
- Levelling feet.
- Auto Weight: automatic weighing sensor system on feet (Includes kit with 6 extra dosing signals).
- Relay card with 6 extra dosing signals: up to 14 signals.
- Silicone gasket.
- Reversible door opening.
- Tropicalized model: protected board.
- Steam kit to transform an E or HW heated machine into steam version.
- Plinth for mops with drawer inox/ skinplate.
- Plinth to level all machines from top.
- Plinth to align the doorbase at 850mm.
- Stainless steel AISI 304 outer casing.
- Stainless steel AISI 304 front panel.
- Maritime volt. electric models: 440V III 50/60 (Hz no N)l.
- Coin/token kits.
- Auto unlock kit for the door.

	U.	LA-11 TP2		LA-14 TP2	
DRUM					
Load capacity 1:9 / 1:10	Kg	11/10		14/13	
Volume	l	100		130	
Diameter	mm	532		620	
Depth	mm	425		430	
GENERAL DETAILS					
Washing speed / Spining speed	r.p.m.	50/1.300		50/1.204	
G Factor	-	500		500	
Maximum force transmitted	KN	2,08 ±0,75		2,49 ±1,05	
Frequency-dynamic force	Hz	16,7		16,7	
Noise level	dB	<70		<70	
Coin laundry version	-	Yes		Yes	
Double drain	-	No		Opt.	
Weighing System / Tilting System	-	Opt./No		Opt./No	
SLUICE option	-	No		No	
DOOR					
Height center door / Height door	mm	630/370		700/440	
Diameter	mm	373		373	
POWER					
Motor	kW	0,75		1,1	
Electric heating power	kW	6		9	
Total electric power (electric model)	kW	6,25		9,4	
Total electric power (hw, steam model)	kW	0,75		1,1	
CONNECTIONS		ELECTRIC	STEAM/HOT WATER	ELECTRIC	STEAM/HOT WATER
Tension 230V - I + N + T	Nº x mm2 / A	2x6+T / 40A	2x1,5+T / 16A	2x10+T / 50A	2x1,5+T / 16A
Tension 230V - III + T	Nº x mm2 / A	3x2,5+T / 20A	-	3x4+T / 32A	-
Tension 400V - III + N + T	Nº x mm2 / A	4x1,5+T / 16A	-	4x1,5+T / 16A	-
Steam inlet (Steam model)	inch	1/2"		1/2"	
Maximum steam consumption (Steam model)	Kg/h	7		8,5	
Water inlet	inch	3/4"		3/4"	
Water main pressure	Kg/cm^2	2-4		2-4	
Maximum water consumption	Lit/h	71,4*		88,8*	
Drain	mm/inch	3"		3"	
Drainage capacity	Lit/min	200		200	
DIMENSIONS / PACKING DIMENSIONS					
Net Width / Gross Width	mm	692/738		788/850	
Net Depth / Gross Depth	mm	830/975		869/1.015	
Net Height / Gross Height	mm	1.185/1.440		1.307/1.600	
Net weight / Gross weight	Kg	198/230		236/274,5	
Volume	m^3	1,03		1,38	

* Programme No. 20, 75% load

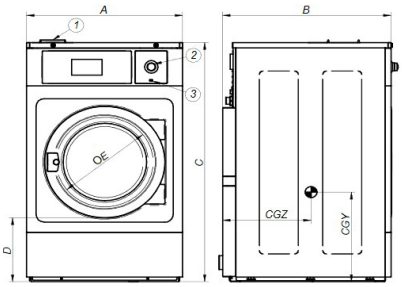

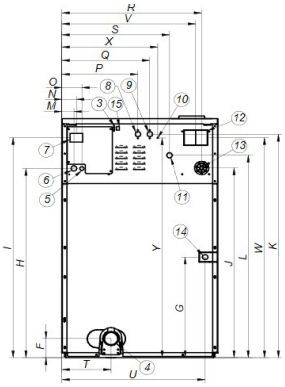

01. Soap dispenser
02. Emergency stop
03. USB port
04. Drain
05. Electric connection to liquid soap pump
06. Electrical connection
07. Main switch
08. Auxiliar water inlet
09. Hot water inlet
10. Equipotential connection
11. Cold water inlet
12. Blur output / Water overload
13. Liquid soap connection
14. Steam connection
15. Ethernet port

		A	B	C	D	E	F	G	H	I	J	K	L	M	N	O	P	Q	R	S	T	U	V	W	X	Y	CGY	CGZ
LA-11	mm	692	830	1.185	370	373	125	354	913	1.085	916	1.100	985	61	74	101	292	352	610	448	226	626	580	1.080	442	1.145	424	577
LA-14	mm	788	869	1.307	440	373	125	385	1.034	1.202	1.037	1.221	1.106	61	74	101	385	445	706	544	243	718	676	1.202	485	1.201	450	651

WASHING

—

HIGH SPIN WASHERS
LOW AND MEDIUM CAPACITY
LA-18/22 TP2

CHARACTERISTICS

TP2
- User friendly and totally programmable 7".
- USB Connection. Online platform free of charge for programming, telemetry, data analysis...thanks to the IoT.
- Videos on display (ads, instructions, etc.).
- 37 languages.
- 8 dosing signals as standard.

G FACTOR
- High G-Factor: G-FACTOR 450-500.

EFFICIENCY
- Intelligent consumption.
- Optimal loading.
- Water Recovery tanks ready: KRS.
- Low water consumption.

VERSATILITY
- Make to order: customisation.
- OPL < > COIN.
- Electric < > Hot water.
- Drain valve < > Pump.
- Wet cleaning features.

CONNECTIVITY
- IoT - FagorKonnect standard.
- Remote technical service.
- Managemant of laundries: OPL and COIN.
- Remote payment.

ERGONOMICS
- Biggest door diameters: Ø460.
- Easy opening/closing system for door lock.

MAINTENANCE
- Hinged control panel: easy and ergonomic access.
- Technical menu: statistics for technicians and maintenance with external console (with console option).

OTHERS
- Grey skinplate outer casing.
- Drum and tub in stainless steel AISI 304.
- Detergent dispenser with 4 compartments.
- Electronic control of imbalance with frequency control.
- LOADING AID system: water and rotation control.
- CB and WRAS approved product. Option ETL.
- High spin washers with suspended drum.

OPTIONS

- DQ-2 Dosing pump kit.
- Extra dosing pump DB-1.
- Double drain.
- Normally closed valve.
- WaterFULL FLOW recirculation of bath water.
- Levelling feet .
- Auto Weight: automatic weighing sensor system on feet (Includes kit with 6 extra dosing signals).
- Relay card with 6 extra dosing signals: up to 14 signals.
- Silicone gasket.
- Reversible door opening.
- Tropicalized model: protected board.
- Steam kit to transform an E or HW heated machine into steam version.
- Plinth to level all machines from top.
- Plinth to align the doorbase at 850mm).
- Plinth for mops with drawer inox/ skinplate.
- Stainless steel outer casing.
- Stainless steel front panel.
- Maritime voltage for electric models: 440V III 50/60 Hz No neutral.
- Coin/token kit.
- Auto unlock kit for the door.

	U.	LA-18 TP2		LA-22 TP2	
DRUM					
Load capacity 1:9 / 1:10	Kg	20/18		25/22	
Volume	l	180		220	
Diameter	mm	700		700	
Depth	mm	470		560	
GENERAL DETAILS					
Washing speed / speed	r.p.m.	47/1.133		47/1.071	
G Factor	-	500		450	
Maximum force transmitted	KN	3,41 ±1,4		4,12 ±1,4	
Frequency-dynamic force	Hz	16		16	
Noise level	dB	<70		<70	
Coin laundry version	-	Yes		Yes	
Double drain	-	Opt.		Opt.	
Weighing System / Tilting System	-	Opt./No		Opt./No	
SLUICE option	-	No		No	
DOOR					
Height center door / Height door	mm	765/450		765/450	
Diameter	mm	460		460	
POWER					
Motor	kW	2,2		2,2	
Electric heating power	kW	12		12	
Total electric power (electric model)	kW	12,75		12,75	
Total electric power (hw, steam model)	kW	2,2		2,2	
CONNECTIONS		ELECTRIC	STEAM/HOT WATER	ELECTRIC	STEAM/HOT WATER
Tension 230V - I + N + T	Nº x mm2 / A	2x16+T / 63A	2x1,5+T / 16A	2x16+T / 63A	2x1,5+T / 16A
Tension 230V - III + T	Nº x mm2 / A	3x6+T / 40A	-	3x6+T / 40A	-
Tension 400V - III + N + T	Nº x mm2 / A	4x4+T / 32A	-	4x4+T / 32A	-
Steam inlet (Steam model)	inch	1/2"		1/2"	
Maximum steam consumption (Steam model)	Kg/h	12		12	
Water inlet	inch	3/4"		3/4"	
Water main pressure	Kg/cm^2	2-4		2-4	
Maximum water consumption	Lit/h	118,3*		118,3*	
Drain	mm/inch	3"		3"	
Drainage capacity	Lit/min	200		200	
DIMENSIONS / PACKING DIMENSIONS					
Net Width / Gross Width	mm	884/945		884/945	
Net Depth / Gross Depth	mm	913/1.030		1.003/1.115	
Net Height / Gross Height	mm	1.405 / 1.680		1.405/1.680	
Net weight / Gross weight	Kg	344,5/388		360/403,5	
Volume	m^3	1,63		1,77	

* Programme No. 20, 75% load

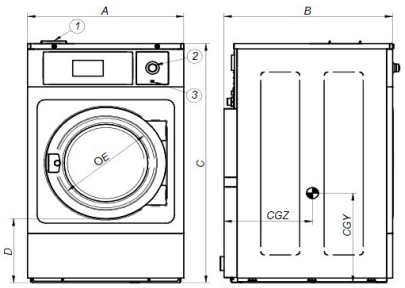

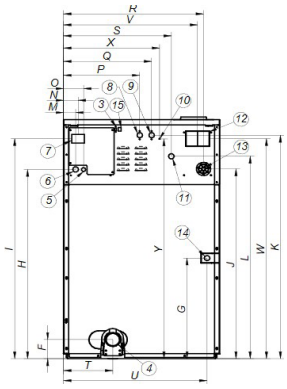

01. Soap dispenser
02. Emergency stop
03. USB port
04. Drain
05. Electric connection to liquid soap pump
06. Electrical connection
07. Main switch
08. Auxiliar water inlet
09. Hot water inlet
10. Equipotential connection
11. Cold water inlet
12. Blur output / Water overload
13. Liquid soap connection
14. Steam connection
15. Ethernet port

		A	B	C	D	E	F	G	H	I	J	K	L	M	N	O	P	Q	R	S	T	U	V	W	X	Y	CGY	CGZ
LA-18	mm	884	913	1.405	450	460	125	380	1.135	1.303	1.138	1.322	1.207	61	74	101	429	509	802	640	322	814	772	1.303	569	1.297	464	702
LA-22	mm	884	1.003	1.405	450	460	125	380	1.135	1.303	1.138	1.322	1.207	61	74	101	429	509	802	640	322	814	772	1.303	569	1.297	464	747

WASHING

—

HIGH SPIN WASHERS
LOW AND MEDIUM CAPACITY
LA-28 TP2

CHARACTERISTICS

TP2
- User friendly and totally programmable 7" TP2 touch screen.
- USB Connection. Online platform free of charge for programming, telemetry, data analysis… thanks to the IoT.
- Videos on display (ads, instructions, etc.).
- 37 languages.
- 8 dosing signals as standard.

G FACTOR
- High G-Factor: G-FACTOR 450.

EFFICIENCY
- Intelligent consumption.
- Optimal loading.
- Water Recovery tanks ready: KRS.
- Low water consumption.

VERSATILITY
- Make to order: customisation.
- OPL < > COIN.
- Electric < > Hot water.
- Drain valve < > Pump.
- Wet cleaning features.

CONNECTIVITY
- IoT - FagorKonnect standard.
- Remote technical service.
- Managemant of laundries: OPL and COIN.
- Remote payment.

ERGONOMICS
- Biggest door diameters: Ø460.
- Easy opening/closing system for door lock.

MAINTENANCE
- Hinged control panel: easy and ergonomic access.
- Technical menu: statistics for technicians and maintenance with external console (with console option).

OTHERS
- Grey skinplate outer casing.
- Drum and tub in stainless steel AISI 304.
- Detergent dispenser with 4 compartments.
- Electronic control of imbalance with frequency control.
- LOADING AID system: water and rotation control.
- CB and WRAS approved product. Option ETL.
- High spin washers with suspended drum.

OPTIONS

- DQ-2 Dosing pump kit.
- Extra dosing pump DB-1.
- Double drain.
- Normally closed valve.
- WaterFULL FLOW recirculation of bath water.
- Levelling feet.
- Auto Weight: automatic weighing sensor system on feet (Includes kit with 6 extra dosing signals).
- Relay card with 6 extra dosing signals: up to 14 signals.
- Silicone gasket.
- Reversible door opening.
- Tropicalized model: protected board.
- Steam kit to transform an E or HW heated machine into steam version.
- Plinth to level all machines from top.
- Plinth to align the doorbase at 850mm).
- Plinth for mops with drawer inox/ skinplate.
- Stainless steel outer casing.
- Stainless steel front panel.
- Maritime voltage for electric models: 440V III 50/60 Hz No neutral.
- Coin/token kit.
- Auto unlock kit for the door.

	U.	LA-28 TP2	
DRUM			
Load capacity 1:9 / 1:10	Kg	31/28	
Volume	l	280	
Diameter	mm	770	
Depth	mm	585	
GENERAL DETAILS			
Washing speed / Spining speed	r.p.m.	45/1.024	
G Factor	-	450	
Maximum force transmitted	KN	5,59 ± 1,75	
Frequency-dynamic force	Hz	15	
Noise level	dB	<70	
Coin laundry version	-	Sí	
Double drain	-	Opt.	
Weighing System / Tilting System	-	Opt./No	
SLUICE option	-	No	
DOOR			
Height center door / Height door	mm	865/560	
Diameter	mm	460	
POWER			
Motor	kW	4	
Electric heating power	kW	18	
Total electric power (electric model)	kW	19,2	
Total electric power (hw, steam model)	kW	4	
CONNECTIONS		ELECTRIC	STEAM / HOT WATER
Tension 230V - I + N + T	Nº x mm2 / A	-	2x4+T / 32A
Tension 230V - III + T	Nº x mm2 / A	3x16+T / 63A	3x2,5+T / 20A
Tension 400V - III + N + T	Nº x mm2 / A	4x4+T / 32A	4x1,5+T / 16A
Steam inlet (Steam model)	inch	3/4”	
Maximum steam consumption (Steam model)	Kg/h	15	
Water inlet	inch	3/4”	
Water main pressure	Kg/cm^2	2-4	
Maximum water consumption	Lit/h	175,5*	
Drain	mm/inch	3”	
Drainage capacity	Lit/min	200	
DIMENSIONS / PACKING DIMENSIONS			
Net Width / Gross Width	mm	979/1.045	
Net Depth / Gross Depth	mm	1.080/1.210	
Net Height / Gross Height	mm	1.550/1.810	
Net weight / Gross weight	Kg	524,5/548,5	
Volume	m^3	2,28	

* Programme No. 20, 75% load

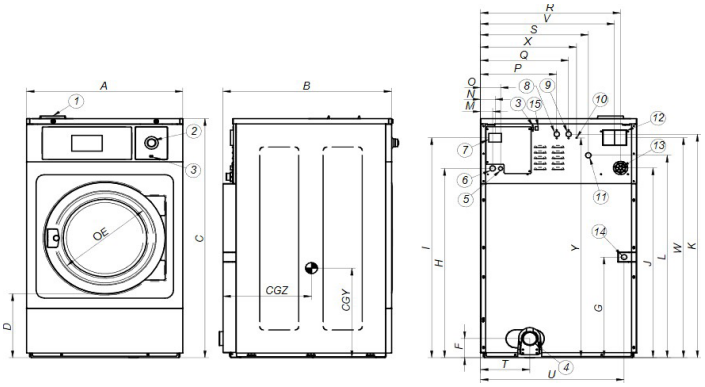

01. Soap dispenser
02. Emergency stop
03. USB port
04. Drain
05. Electric connection to liquid soap pump
06. Electrical connection
07. Main switch
08. Auxiliar water inlet
09. Hot water inlet
10. Equipotential connection
11. Cold water inlet
12. Blur output / Water overload
13. Liquid soap connection
14. Steam connection
15. Ethernet port

	A	B	C	D	E	F	G	H	I	J	K	L	M	N	O	P	Q	R	S	T	U	V	W	X	Y	CGY	CGZ
LA-28	979	1.080	1.550	560	460	125	490	1.282	1.450	1.259	1.465	1.354	61	74	101	481	561	861	673	367	909	831	1.424	624	1.510	773	735

WASHING

HIGH SPIN WASHERS
LOW AND MEDIUM CAPACITY
LA-35C/45C TP2

CHARACTERISTICS

TP2
- User friendly and totally programmable 7".
- USB Connection. Online platform free of charge for programming, telemetry, data analysis… thanks to the IoT.
- Videos on display (ads, instructions).
- 37 languages.
- 8 dosing signals as standard.

G FACTOR
- High G-Factor: G-FACTOR 450.

EFFICIENCY
- Intelligent consumption.
- Optimal loading.
- Water Recovery tanks ready: KRS.
- Low water consumption.

VERSATILITY
- Make to order: customisation.
- OPL < > COIN.
- Electric < > Hot water.
- Drain valve < > Pump.
- Wet cleaning features.

CONNECTIVITY
- IoT - FagorKonnect standard.
- Remote technical service.
- Managemant of laundries: OPL and COIN.
- Remote payment.

ERGONOMICS
- Biggest door diameters: Ø560.
- Easy opening/closing system for door lock.

MAINTENANCE
- Hinged control panel: easy and ergonomic access.
- Technical menu: statistics for technicians and maintenance with external console (with console option).

OTHERS
- Grey skinplate outer casing.
- Drum and tub in stainless steel AISI 304.
- Detergent dispenser with 4 compartments.
- Electronic control of imbalance with frequency control.
- LOADING AID system: water and rotation control.
- CB and WRAS approved product. Option ETL.
- High spin washers with suspended drum.

OPTIONS

- DQ-2 Dosing pump kit.
- Extra dosing pump DB-1.
- Double drain.
- Normally closed valve.
- Water FULL FLOW: recirculation of bath water.
- Levelling feet.
- Auto Weight: automatic weighing sensor system on feet (Includes kit with 6 extra dosing signals).
- Relay card with 6 extra dosing signals: up to 14 signals.
- Reversible door opening.
- Tropicalized model: protected board.
- Steam kit to transform an E or HW heated machine into steam version.
- Plinth to align loading height (door base at 850mm).
- Stainless steel AISI 304 outer casing.
- Stainless steel AISI 304 front panel (LA-35C).
- Maritime voltage for electric models: 440V III 50/60 Hz.
- No neutral.
- Voltage 230 V III 50/60 Hz.
- Coin/token kit.
- Auto unlock kit for the door.

	U.	LA-35C TP2		LA-45C TP2	
DRUM					
Load capacity 1:9 / 1:10	Kg	39/35		47/42	
Volume	l	350		450	
Diameter	mm	860		860	
Depth	mm	602		720	
GENERAL DETAILS					
Washing speed / Spining speed	r.p.m.	42,5/966		42,5/966	
G Factor	-	450		450	
Maximum force transmitted	KN	7,36 ±2,45		7,36 ±2,45	
Frequency-dynamic force	Hz	14,3		14,3	
Sound level	dB	<70		<70	
Coin laundry version	-	Yes		No	
Double drain	-	Opt.		Opt.	
Weighing System / Tilting System	-	Opt./No		Opt./No	
SLUICE option	-	No		No	
DOOR					
Height center door / Height door	mm	1000/640		1000/640	
Diameter	mm	560		560	
POWER					
Motor	kW	6		6	
Electric heating power	kW	21		21	
Total electric power (electric model)	kW	22		22	
Total electric power (hw, steam model)	kW	6		6	
CONNECTIONS		ELECTRIC	STEAM/HOT WATER	ELECTRIC	STEAM/HOT WATER
Tension 230V - III + T	Nº x mm2 / A	3x16+T / 63A	3x4+T / 32A	3x16+T / 63A	3x4+T / 32A
Tension 400V - III + N + T	Nº x mm2 / A	4x6+T / 40A	4x1,5+T / 16A	4x6+T / 40A	4x1,5+T / 16A
Steam inlet (Steam mod.)	inch	3/4”		3/4”	
Maximum steam consumption (Steam mod.)	Kg/h	18		18	
Water inlet	inch	3/4”		3/4”	
Water main pressure	Kg/cm^2	2-4		2-4	
Maximum water consumption	Lit/h	261,3*		335,9*	
Drain	mm/inch	3”		3”	
Drainage capacity	Lit/min	200		200	
DIMENSIONS / PACKING DIMENSIONS					
Net Width / Gross Width	mm	1.095/1.205		1.095/1.205	
Net Depth / Gross Depth	mm	1.184/1.330		1.304/1.440	
Net Height / Gross Height	mm	1.730/1.850		1.730/1.850	
Net weight / Gross weight	Kg	735/786		747/853	
Volume	m^3	2,7		3,3	

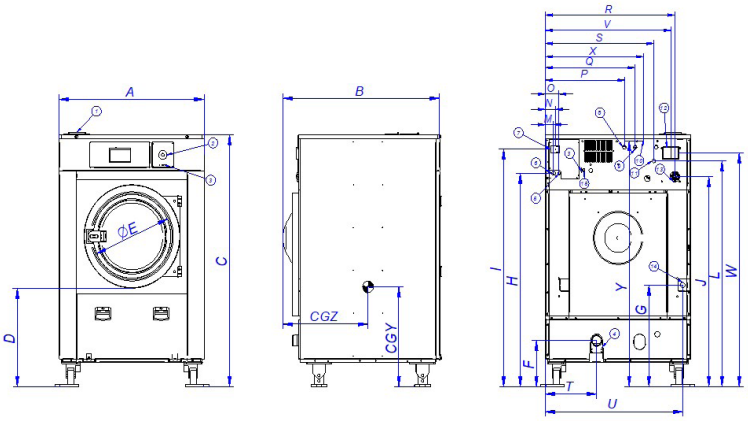

* Programme No. 20, 75% load

01. Soap dispenser
02. Emergency stop
03. USB port
04. Drain
05. Electric connection to liquid soap pump
06. Electrical connection
07. Main switch
08. Auxiliar water inlet
09. Hot water inlet
10. Equipotential connection
11. Cold water inlet
12. Blur output / Water overload
13. Liquid soap connection
14. Steam connection
15. Ethernet port

		A	B	C	D	E	F	G	H	I	J	K	L	M	N	O	P	Q	R	S	T	U	V	W	X	Y	CGY	CGZ
LA-35C	mm	1.095	1.184	1.767	640	560	158	712	1.500	1.668	1.501	1.683	1.587	61	74	101	596	676	976	808	384	1.037	946	1.637	740	1.723	795	732
LA-45C	mm	1.095	1.304	1.767	640	560	158	712	1.500	1.668	1.331	1.513	1.587	61	74	101	596	676	976	808	384	1.037	946	1.637	740	1.723	795	800

WASHING

—

HIGH SPIN WASHERS
HIGH CAPACITY
LA-60C/80C TP2

CHARACTERISTICS

TP2
- User friendly and totally programmable 7".
- USB Connection. PC software free of charge for programming, traceability, data analysis.
- Videos on display (ads, instructions).
- 37 languages.
- 8 dosing signals as standard.

G FACTOR
- High G-Factor 450.

EFFICIENCY
- Intelligent consumption.
- Optimal loading.
- Low water consumption.

VERSATILITY
- Electric < > Hot water.
- WET CLEANING features as standard.

CONNECTIVITY
- IoT - FagorKonnect standard.
- Remote technical service.
- Managemant of laundries: OPL.

ERGONOMICS
- Big door diameters: Ø 560 mm.
- Easy opening/closing system for door lock.

MAINTENANCE
- Equivalent parts for all models: contactors, electronic devices, gear.
- Technical menu: traceability, error diagnosis.

OTHERS
- Drum and tub in stainless steel AISI 304.
- 3 water inlets.
- Soft mounted, free standing washers.
- Panels in skinplate.
- Easy to install, no need of fixation to the floor.
- CB and WRAS approved product. Option ETL.
- High spin washers with suspended drum.

OPTIONS

- DQ-2 Dosing pump kit.
- Extra dosing pump DB-1.
- Double drain.
- Tropicalized model: protected board.
- Tilting options: frontal or double tilt.
- Auto Weight: automatic weighing sensor system on feet (Not available with tilting kits).
- Relay card with 6 extra dosing signals: up to 14 signals.
- Stainless steel AISI 304 outer casing.
- Double heating E+S.
- Maritime voltage for electric models: 440V III 50/60 Hz No neutral.

	U.	LA-60C TP2		LA-80C TP2	
DRUM					
Load capacity 1:9 / 1:10	Kg	65/59		85 / 77	
Volume	l	590		770	
Diameter	mm	1.048		1.048	
Depth	mm	680		892	
GENERAL DETAILS					
Washing speed / Spining speed	r.p.m.	38 / 875		38 / 875	
G Factor	-	450		450	
Maximum force transmitted	KN	18 ±4,2		23 ±4,8	
Frequency-dynamic force	Hz	12,66		12,66	
Noise level	dB	< 70		< 70	
Coin laundry version	-	No		No	
Double drain	-	Opt.		Opt.	
Weighing system / Tilting system	-	Opt.		Opt.	
SLUICE option	-	No		No	
DOOR					
Height door center / door base	mm	1.170 / 810		1.170 / 810	
Diameter	mm	560		560	
POWER					
Motor	kW	15		15	
Electric heating power	kW	36		48/36	
Total electric power (electric model)	kW	39		51/39	
Total electric power (hot water, steam)	kW	15		15	
CONNECTIONS		ELECTRIC	STEAM/HOT WATER	ELECTRIC	STEAM/HOT WATER
Tension 230V - III + T	Nº x mm2 / A	3x25+T / 100A	3X6+T - 40A	3x25+T / 100A	3X6+T - 40A
Tension 400V - III + N + T	Nº x mm2 / A	4x16+T / 63A	4x10+T - 50A	4x25+T / 80A	4x10+T / 50A
Steam inlet (Steam model)	inch	3/4”		3/4”	
Max. steam consumption (Steam model)	Kg/h	21		25	
Water inlet	inch	1”		1”	
Water main pressure	Kg/cm^2	2-4		2-4	
Maximum water consumption	Lit/h	598		781	
Drain	mm/inch	3”		3”	
Drainage capacity	Lit/min	200		200	
DIMENSIONS / PACKING DIMENSIONS					
Net Width / Gross Width	mm	1.420 / 1.600		1.420 / 1.600	
Net Depth / Gross Depth	mm	1.433 / 1.595		1.645 / 1.805	
Net Height / Gross Height	mm	1.890 / 1.930		1.890 / 1.930	
Net weight / Gross weight	Kg	1.454 / 1.544		1.800 / 2.000	
Volume	m^3	4,9		5,6	

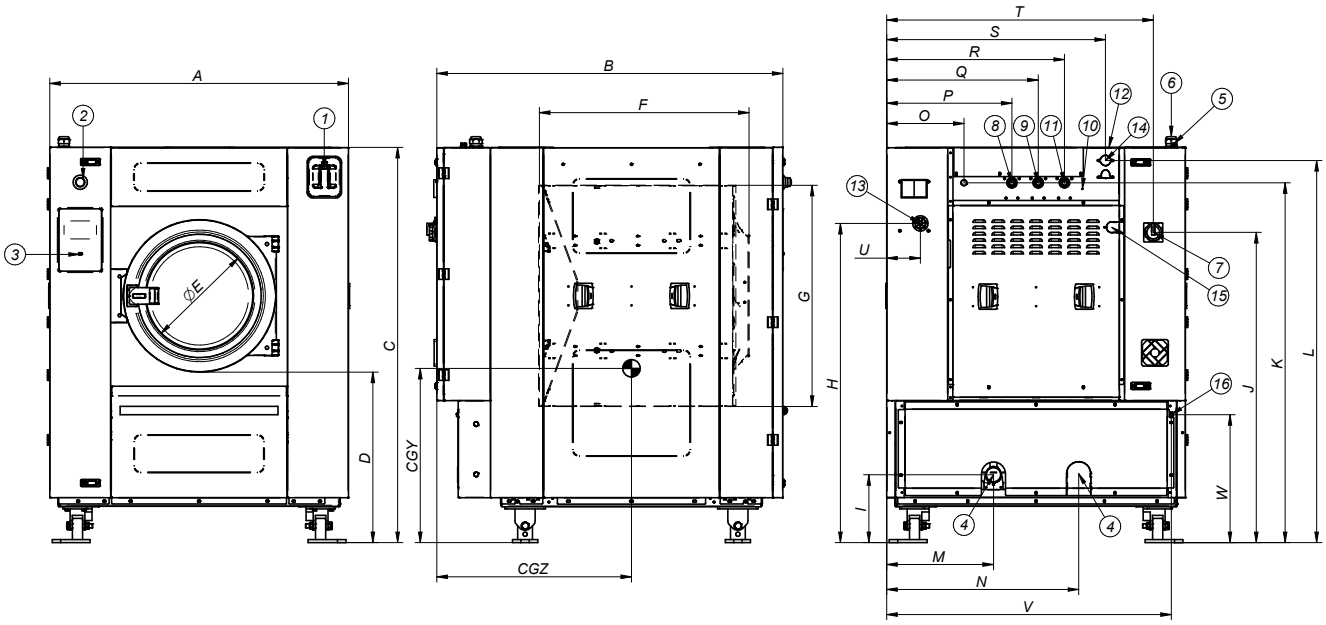

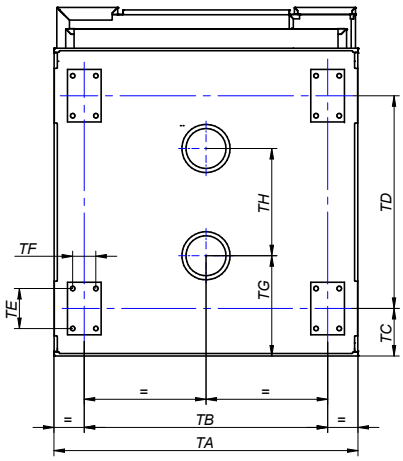

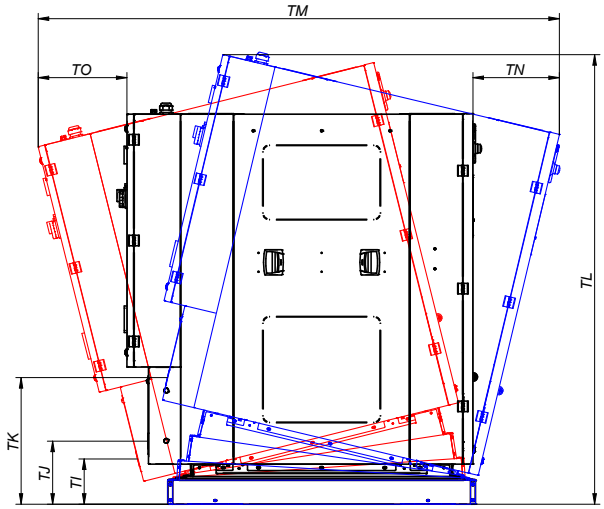

** Programme No. 2, 100% load

01. Soap dispenser
02. Emergency stop
03. USB port
04. Drain 1
05. Drain 2
06. Electric connection to liquid soap pump
07. Electrical connection
08. Main switch
09. Auxiliar water inlet
10. Hot water inlet
11. Equipotential connection
12. Cold water inlet
13. Steam output
14. Liquid soap connection
15. Steam connection
16. Air intake
17. Ethernet port

	A	B	C	D	E	F	G	H	I	J	K	L	M	N	O	P	Q	R	S	T	U	V	W	X	Y	CGY	CGZ
LA-60C TP2	1.420	1.433	1.890	810	560	760	1.050	1.563	323	1.475	1.710	1.817	508	912	367	595	720	845	1.040	1.267	160	1.353	608	1.500	348	830	820
LA-80C TP2	1.420	1.645	1.890	810	560	972	1.050	1.563	323	1.475	1.710	1.817	508	912	367	595	720	845	1.040	1.267	160	1.353	608	1.500	348	830	925

	TA	TB	TC	TD	TE	TF	TG	TH	TI	TJ	TK	TL	TM	TN	TO
LA-60C TP2	1.145	1.157	226	799	190	110	265	722	215	300	565	2.095	2.266	410	422
LA-80C TP2	1.145	1.157	226	1.011	190	110	475	510	215	300	602	2.137	2.478	410	422

WASHING

—

HIGH SPIN WASHERS
HIGH CAPACITY
LA-100C/120C TP2

CHARACTERISTICS

TP2
- User friendly and totally programmable 7".
- USB Connection. PC software free of charge for programming, traceability, data analysis.
- Videos on display (ads, instructions)
- 37 languages.
- 8 dosing signals as standard.

G FACTOR
- High G-FACTOR 350.

EFFICIENCY
- Intelligent consumption.
- Optimal loading.
- Water Recovery tanks ready: KRS.
- Low water consumption.

VERSATILITY
- Electric < > Hot water.
- Wet cleaning features.

CONNECTIVITY
- IoT - FagorKonnect standard.
- Remote technical service.
- Managemant of laundries: OPL.
- Remote payment.

ERGONOMICS
- Biggest door diameters: Ø700.
- Easy opening/closing system for door lock.

MAINTENANCE
- Equivalent parts for all models: contactors, electronic devices, gear.
- Technical menu: traceability, error diagnosis.

OTHERS
- Drum and tub in stainless steel AISI 304.
- 3 water inlets.
- Air inlet.
- Soft mounted, free standing washers.
- Panels in skinplate.
- Easy to install, no need of fixation to the floor.
- CB and WRAS approved product. Option ETL.
- High spin washers with suspended drum.

OPTIONS

- DQ-2 Dosing pump kit.
- Extra dosing pump DB-1.
- Double drain.
- Tropicalized model: protected board.
- Tilting options: frontal or double tilt.
- Auto Weight: automatic weighing sensor system on feet (Not available with tilting kits).
- Relay card with 6 extra dosing signals: up to 14 signals.
- Stainless steel AISI 304 outer casing.
- Double heating E+S.
- Maritime voltage for electric models: 440V III 50/60 Hz No neutral.

	U.	LA-100C	LA-120C
DRUM			
Load capacity 1:9 / 1:10	Kg	105/95	130/115
Volume	l	950	1.150
Diameter	mm	1.360	1.360
Depth	mm	637	775
GENERAL DETAILS			
Washing speed / Spinning speed	r.p.m.	34 / 678	34 / 678
G Factor	-	350	350
Maximum force transmitted	KN	37,77 ±5,25	37,77 ±5,25
Frequency-dynamic force	Hz	11,33	11,33
Noise level	dB	<70	<70
Coin laundry version	-	No	No
Double drain	-	Opt.	Opt.
Weighing System / Tilting System	-	Opt.	Opt.
SLUICE option	-	No	No
DOOR			
Height center door / Height door	mm	1.330/900	1.330/900
Diameter	mm	700	700
POWER			
Motor	kW	15	15
Electric heating power	kW	-	-
Total electric power (electric model)	kW	-	-
Total electric power (hw, steam mod.)	kW	15	15
CONNECTIONS		STEAM/HOT WATER	STEAM/HOT WATER
Tension 230V - III + T	Nº x mm2 / A	3x16+T / 63A	3x16+T / 63A
Tension 400V - III + N + T	Nº x mm2 / A	4x6+T / 40A	4x6+T / 40A
Steam inlet (Steam model)	inch	1-1/4”	1-1/4”
Maximum steam consumption (Steam model)	Kg/h	26,5	26,5
Water inlet	inch	1-1/2”	1-1/2”
Water main pressure	Kg/cm^2	2-4	2-4
Maximum water consumption	Lit/h	1.058**	1.254**
Air inlet	Kg/cm^2	4	4
Drain	mm/inch	4”	4”
Drainage capacity	Lit/min	500	500
DIMENSIONS / PACKING DIMENSIONS			
Net Width / Gross Width	mm	1.836/1.940	1.836/1.940
Net Depth / Gross Depth	mm	1.710/2.030	1.832/2.030
Net Height / Gross Height	mm	2.245/2.290	2.245/2.290
Net weight / Gross weight	Kg	2.300/2.600	2.762/3.058
Volume	m^3	9	9

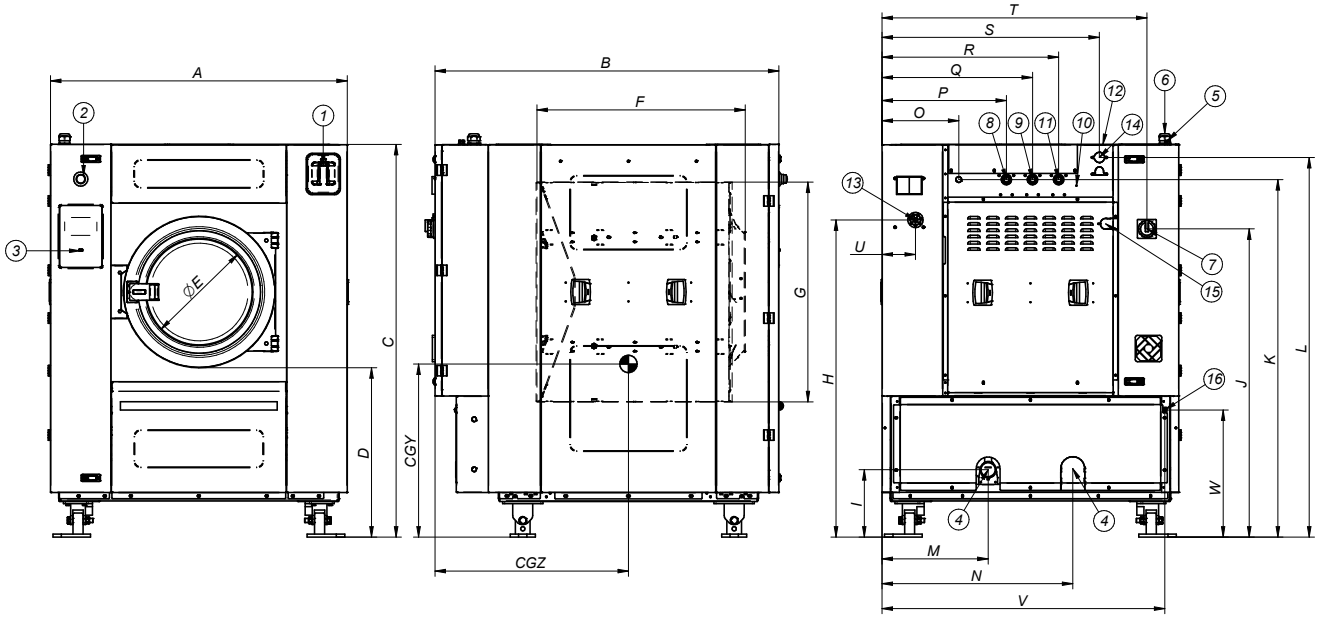

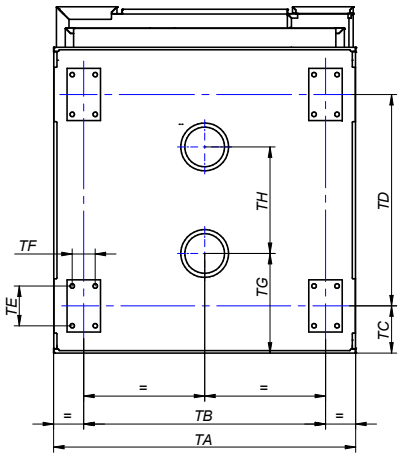

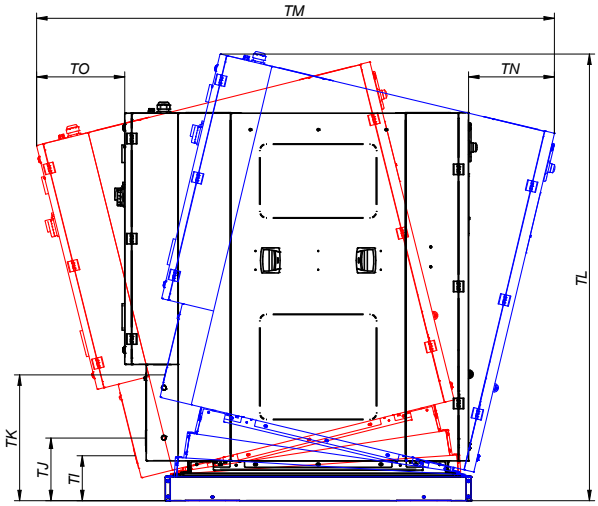

** Programme No. 2, 100% load

01. Soap dispenser
02. Emergency stop
03. USB port
04. Drain 1
05. Drain 2
06. Electric connection to liquid soap pump
07. Electrical connection
08. Main switch
09. Auxiliar water inlet
10. Hot water inlet
11. Equipotential connection
12. Cold water inlet
13. Steam output
14. Liquid soap connection
15. Steam connection
16. Air intake
17. Ethernet port

		A	B	C	D	E	F	G	H	I	J	K	L	M	N	O	P	Q	R	S	T	U	V	W	Y	Z	CGY	CGZ
LA-100C	mm	1.836	1.710	2.245	945	700	792	1.350	1.740	336	1.781	2.038	2.110	1.095	1.092	494	634	774	954	994	1.239	1.646	165	2.049	2.050	717	853	1.025
LA-120C	mm	1.836	1.832	2.245	945	700	930	1.350	1.740	336	1.781	2.038	2.110	1.095	1.092	494	634	774	954	994	1.239	1.646	165	2.049	2.050	717	853	1.130

	TA	TB	TC	TD	TE	TF	TG	TH	TI	TJ	TK	TL	TM	TN	TO
LA-100C	1.765	1.615	200	1.161	190	110	375	806	210	330	667	2.504	2.636	496	491
LA-120C	1.765	1.615	200	1.344	190	110	375	990	254	330	662	2.465	2.672	419	423