DRYING

—

SINGLE POCKET DRYERS
ADVANCE
SR-11/14 TP2

CHARACTERISTICS

TP2
- 7" colour touch screen, programmable and easy to use.
- USB connection. Includes online platform for programming, telemetry, data analysis... via IoT.
- On-screen videos: announcements, instructions (useful for self-service).
- 37 languages.

OUTSTANDING FEATURES
- FREQUENCY INVERTER - Standard inversion of rotation.
- STAINLESS DRUM - Standard stainless steel drum.
- Standard frequency inverter.

EFFICIENCY
- MIXED FLOW - Axial-radial airflow system.
- EFFICIENT AIRFLOW - Large debris filter.

VERSATILITY
- Tailor-made - Customisation.
- WET CLEANING.
- OPL > Self-Service - The standard OPL dryer convertible to self-service version.

CONNECTIVITY
- IoT FagorKonnect standard.
- Laundry management: OPL and self-service.
- Remote payment.

ERGONOMICS
- Stainless steel filter drawer.
- Large door diameters.
- Door opening direction reversal.
- 180º opening hinges.

MAINTENANCE
- Folding panel: easy and ergonomic access.
- Technical menu: statistics for technicians.
- Easy access to components.

OTHERS
- Grey skinplate cabinet, stainless steel effect.
- SOFT TOUCH - Drum with recessed perforations.
- COOL DOWN - Cooling at the end of the cycle.
- Available in electric, gas or steam heating.
- CE approved.

OPTIONS

- Humidity control.
- Double glazed door.
- FIRE KARE - Fire protection system. Opposing door opening.
- Tropicalised model.
- Dosing system - perfume spraying.
- Rear panel external air inlet + filter.
- Debris filter with 0.6 mm mesh (standard is 0.3 mm).
- Debris filter with 1.2 mm mesh (standard is 0.3 mm).
- Stainless steel cabinet.
- Stainless steel front panel.
- Stainless steel steam coil.
- Low pressure steam coil.
- Reduced power (12 kW instead of 18 kW) for SR-14.
- Wooden packaging.
- Different voltage options available.
- Self-service payment systems.

	U.	SR-11 TP2	SR-14 TP2
CAPACITY			
Capacity 1/18	Kg	11,7	15
	Lb	25,7	33,1
Capacity 1/20	Kg	10,5	13,5
	Lb	23,1	29,8
DRUM			
Ø Drum	mm	750	750
	inch	29,53	29,53
Drum length	mm	475	610
	inch	18,7	24,02
Drum volume	l	210	270
	cu ft	7,41	9,53
Ø Door	mm	574	574
	inch	22,6	22,6
Floor to door center	mm	976	976
	inch	38,43	38,43
Floor to lower part of the door	mm	618	618
	inch	24,33	24,33
Drum motor power	kW	0,37	0,37
ELECTRIC POWER			
Installed heating power	kW	12	18
Installed electrical power	kW	12,67	18,67
Evaporation capacity	l/h	9,3	13,5
	USgallon/h	2,43	3,57
Hourly output	Kg/h	20,3	26,9
	Lb/h	47,75	59,3
GAS POWER			
Installed heating power gas	Kcal/h	17627	17627
	Btu/h	69996	69996
Installed heating power gas	kW	20,5	20,5
Installed electrical power	kW	0,67	0,67
Instant propane gas consumption (G31)	Kg/h	1,76	1,76
	Lb/h	3,88	3,88
Instant natural gas consumption (G20)	m³/h	2,17	2,17
	cfm	1,28	1,28
Evaporation capacity	l/h	14,5	15,4
	USgallon/h	3,83	4,07
Hourly output	Kg/h	29	30,25
	Lb/h	63,93	66,69
Ø Gas inlet	BSPP ISO 228-1	1/2"	1/2"
STEAM POWER			
Installed heating power steam	kW	30	30
	Btu/h	102364	102364
Installed electrical power	kW	0,67	0,67
Steam consumption (8 barG) - Stándar	Kg/h	53	53
Steam consumption (116 psiG)	Lb/h	63,8	63,8
Steam pressure - Standard	barG	6 - 9	6 - 9
	psiG	87 - 130.5	87 - 130.5
Steam inlet - steam outlet - Standard	BSPT- ISO7.1	3/4"	3/4"
Steam inlet - condensate oulet	NPT ANSI B1.20.1 Tapered	3/4"	3/4"
Steam consumption (5 bagG) - Low pressure	Kg/h	57	57
Steam consumption (72,5 psiG) - Low pressure	Lb/h	68,7	68,7
Steam pressure - Low Pressure	barG	3 - 6	3 - 6
	psiG	43.5 - 87	43.5 - 89
Steam Inlet - Steam Outlet - Low Pressure	BSPT - ISO7.1	1"	1"

VENTILATION					
Nominal air flow	m³/h	850		850	
	cfm	500		500	
Air outlet Ø	mm	200		200	
	inch	7,87		7,87	
Fan motor power	kW	0,25		0,25	
HEAT DISSIPATION					
Total max heat dissipation	kW	1,2		1,8	
	Btu/h	4097		6145	
Front pannel max heat dissipation	kW	0,8		1,3	
	Btu/h	2868		4302	
CONNECTIONS		ELECTRICAL	STEAM / GAS	ELECTRICAL	STEAM / GAS
Tension 230V - I + N + T	Nº x mm2 / A	3 x 25 / 63 A	3 x 1,5 / 16 A	-	3x1,5 / 16 A
Tension 230V - III + T	Nº x mm2 / A	4 x 10 / 40 A	3 x 1,5 / 16 A	4x16 / 63 A	3x1,5 / 20 A
Tension 400V - III + N + T	Nº x mm2 / A	5 x 4 / 25 A	3 x 1,5 / 16 A	5x10 / 32 A	3x1,5 / 20 A
DIMENSIONS / PACKING DIMENSIONS					
Net width / Gross width	mm	785 / 865		785 / 865	
	inch	30,91 / 34,06		30,91 / 34,06	
Net depth / Gross depth	mm	855 / 940		989 / 1.074	
	inch	33,66 / 37,01		38,94 / 42,28	
Net height / Gross height	mm	1.694 / 1.840		1.694 / 1.840	
	inch	66,69 / 72,44		66,69 / 72,44	
Net weight / Gross weight	Kg	172 / 180		180 / 190	
	Lb	379,2 / 396,83		396,83 / 418,88	
OTHERS					
Sound level	dB	64		64	

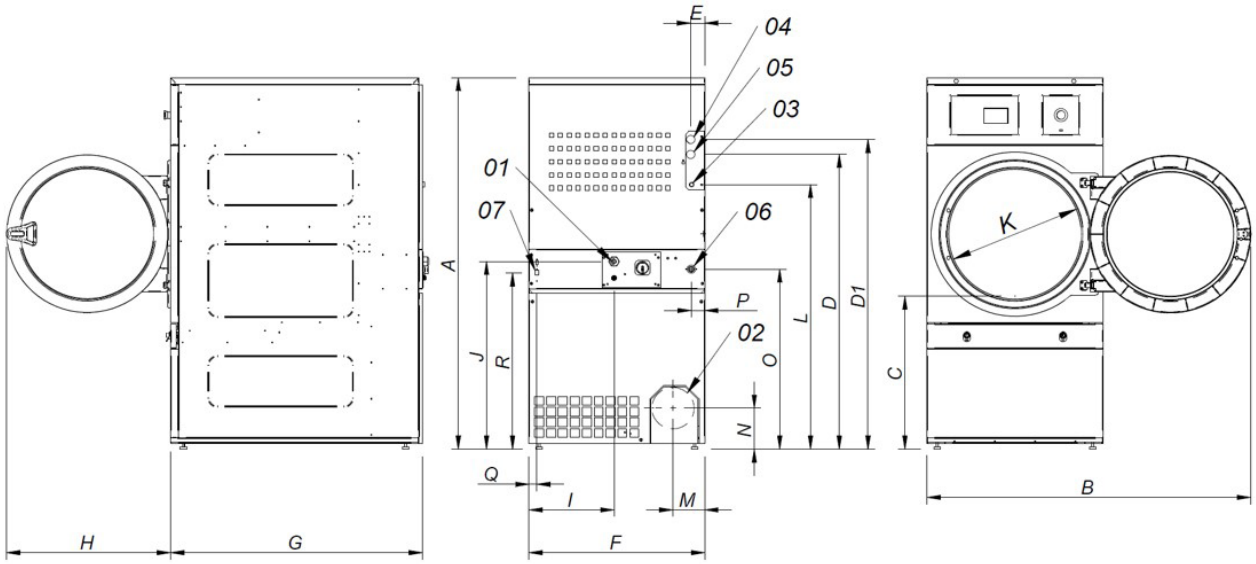

01. Electrical connection
02. Vapour outlet Ø200
03. Gas inlet 1/2".
04. Steam inlet 3/4".
05. Condensate outlet 3/4".
06. Fire valve 3/4".
07. Ethernet connection (only available on models with TP2 control)

	A	B	C	D	D1	E	E1	F	G	H	I	J	K	L	M	N	O	P	Q	R
SR-11 TP2	1694	1447	689	1354	1422	68	68	785	855	735	380	870	575	1226	133	180	830	65	35	805
SR-14 TP2	1694	1447	689	1354	1422	68	68	785	989	735	380	870	575	1226	133	180	830	65	35	805

DRYING

—

SINGLE POCKET DRYERS
ADVANCE
SR-18/22 TP2

CHARACTERISTICS

TP2
- 7" colour touch screen, programmable and easy to use.
- USB connection. Includes online platform for programming, telemetry, data analysis... via IoT.
- On-screen videos: announcements, instructions (useful for self-service).
- 37 languages.

OUTSTANDING FEATURES
- FREQUENCY INVERTER - Standard inversion of rotation.
- STAINLESS DRUM - Standard stainless steel drum.
- Standard frequency inverter.

EFFICIENCY
- MIXED FLOW - Axial-radial airflow system.
- EFFICIENT AIRFLOW - Large debris filter.

VERSATILITY
- Tailor-made - Customisation.
- WET CLEANING.
- OPL > Self-Service - The standard OPL dryer convertible to self-service version.

CONNECTIVITY
- IoT FagorKonnect standard.
- Laundry management: OPL and self-service.
- Remote payment.

ERGONOMICS
- Stainless steel filter drawer.
- Large door diameters.
- Door opening direction reversal.
- 180º opening hinges.

MAINTENANCE
- Folding panel: easy and ergonomic access.
- Technical menu: statistics for technicians.
- Easy access to components.

OTHERS
- Grey skinplate cabinet, stainless steel effect.
- SOFT TOUCH - Drum with recessed perforations.
- COOL DOWN - Cooling at the end of the cycle.
- Available in electric, gas or steam heating.
- CE approved.

OPTIONS

- Humidity control.
- Double glazed door.
- FIRE KARE - Fire protection system. Opposing door opening.
- Tropicalised model.
- Dosing system - perfume spraying.
- Rear panel external air inlet + filter.
- Debris filter with 0.6 mm mesh (standard is 0.3 mm).
- Debris filter with 1.2 mm mesh (standard is 0.3 mm).
- Stainless steel cabinet.
- Stainless steel front panel.
- Stainless steel steam coil.
- Low pressure steam coil.
- Reduced power (12 kW instead of 18 kW) for SR-18.
- Wooden packaging.
- Different voltage options available.
- Self-service payment systems.

	U.	SR-18 TP2	SR-22 TP2
CAPACITY			
Capacity 1/18	Kg	18,3	24,3
	Lb	40,4	53,9
Capacity 1/20	Kg	16,5	22
	Lb	36,3	48,5
DRUM			
Ø Drum	mm	750	835
	inch	29,53	32,9
Drum length	mm	746	800
	inch	29,37	31,5
Drum volume	l	330	440
	cu ft	11,64	15,54
Ø Door	mm	574	574
	inch	22,6	22,6
Floor to door center	mm	976	1.030
	inch	38,43	40,55
Floor to lower part of the door	mm	618	672
	inch	24,33	26,46
Drum motor power	kW	0,37	0,37
ELECTRIC POWER			
Installed heating power	kW	18	24
Installed electrical power	kW	18,67	24,97
Evaporation capacity	l/h	14,1	17
	USgallon/h	3,72	4,5
Hourly output	Kg/h	28,3	34
	Lb/h	62,39	74,96
GAS POWER			
Installed heating power gas	Kcal/h	17627	26655
	Btu/h	69996	105776
Installed heating power gas	kW	20,5	31
Installed electrical power	kW	0,67	0,97
Instant propane gas consumption (G31)	Kg/h	1,76	2,66
	Lb/h	3,88	5,86
Instant natural gas consumption (G20)	m³/h	2,17	3,28
	cfm	1,28	1,93
Evaporation capacity	l/h	16,3	20
	USgallon/h	4,31	5,28
Hourly output	Kg/h	32,6	40
	Lb/h	71,87	88,18
Ø Gas inlet	BSPP ISO 228-1	1/2"	1/2"
STEAM POWER			
Installed heating power steam	kW	30	49,2
	Btu/h	102364	167877
Installed electrical power	kW	0,67	0,97
Steam consumption (8 barG) - Stándar	Kg/h	53	87
Steam consumption (116 psiG)	Lb/h	63,8	104,8
Steam pressure - Standard	barG	6 - 9	6 - 9
	psiG	87 - 130.5	87 - 130.5
Steam inlet - steam outlet - Standard	BSPT- ISO7.1	3/4"	1"
Steam inlet - condensate oulet	NPT ANSI B1.20.1 Tapered	3/4"	1"
Steam consumption (5 bagG) - Low pressure	Kg/h	57	-
Steam consumption (72,5 psiG) - Low pressure	Lb/h	68,7	-
Steam pressure - Low Pressure	barG	3 - 6	3 - 6
	psiG	43.5 - 91	43.5 - 93
Steam Inlet - Steam Outlet - Low Pressure	BSPT - ISO7.1	1"	1"

VENTILATION					
Nominal air flow	m³/h	850		1200	
	cfm	500		706	
Air outlet Ø	mm	200		200	
	inch	7,87		7,87	
Fan motor power	kW	0,25		0,55	
HEAT DISSIPATION					
Total max heat dissipation	kW	1,8		2,4	
	Btu/h	6145		8194	
Front pannel max heat dissipation	kW	1,3		1,7	
	Btu/h	4302		5736	
CONNECTIONS		ELECTRICAL	STEAM / GAS	ELECTRICAL	STEAM / GAS
Tension 230V - I + N + T	Nº x mm2 / A	-	3x1.5 / 16 A	-	3x1.5 / 16 A
Tension 230V - III + T	Nº x mm2 / A	4 x 16 / 63 A	3x1.5 / 16 A	4 x 25 / 80 A	3x1.5 / 16 A
Tension 400V - III + N + T	Nº x mm2 / A	5x10 / 32 A	3x1.5 / 16 A	5 x 10 / 40 A	3x1.5 / 16 A
DIMENSIONS / PACKING DIMENSIONS					
Net width / Gross width	mm	785 / 865		890 / 970	
	inch	30,91 / 34,06		35,04 / 38,19	
Net depth / Gross depth	mm	1.125 / 1.210		1.255 / 1.345	
	inch	44,29 / 47,64		49,41 / 52,95	
Net height / Gross height	mm	1.694 / 1.840		1.812 / 1.940	
	inch	66,69 / 72,44		71,34 / 76,38	
Net weight / Gross weight	Kg	187 / 200		210 / 230	
	Lb	412,26 / 440,92		462,97 / 507,06	
OTHERS					
Sound level	dB	64		65	

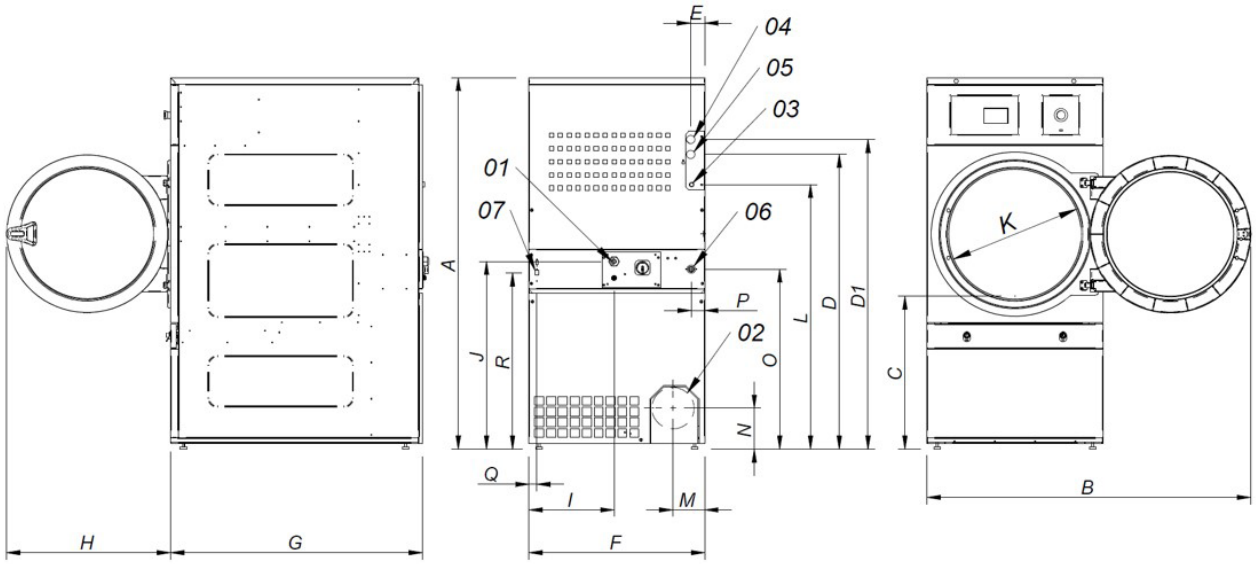

01. Electrical connection
02. Vapour outlet Ø200
03. Gas inlet 1/2".
04. Steam inlet 3/4' (1' SR-22)
05. Condensate outlet 3/4' (1' SR-22)
06. Fire valve 3/4' (1' SR-22)
07. Ethernet connection (only available on models with TP2 control)

	A	B	C	D	D1	E	E1	F	G	H	I	J	K	L	M	N	O	P	Q	R
SR-18 TP2	1694	1447	689	1354	1422	68	68	785	1125	735	380	870	575	1226	133	180	830	65	35	805
SR-22 TP2	1812	1552	743	1430	1532	112	55	890	1255	735	107	920	575	1344	238	180	885	65	37	860

DRYING

—

SINGLE POCKET DRYERS
ADVANCE
SR-28/35 TP2

CHARACTERISTICS

TP2
- 7" colour touch screen, programmable and easy to use.
- USB connection. Includes online platform for programming, telemetry, data analysis... via IoT.
- On-screen videos: announcements, instructions (useful for self-service).
- 37 languages.

OUTSTANDING FEATURES
- FREQUENCY INVERTER - Standard inversion of rotation.
- STAINLESS DRUM - Standard stainless steel drum.
- Standard frequency inverter.

EFFICIENCY
- MIXED FLOW - Axial-radial airflow system.
- EFFICIENT AIRFLOW - Large debris filter.

VERSATILITY
- Tailor-made - Customisation.
- WET CLEANING.
- OPL > Self-Service - The standard OPL dryer convertible to self-service version.

CONNECTIVITY
- IoT FagorKonnect standard.
- Laundry management: OPL and self-service.
- Remote payment.

ERGONOMICS
- Stainless steel filter drawer.
- Large door diameters.
- Door opening direction reversal.
- 180º opening hinges.

MAINTENANCE
- Folding panel: easy and ergonomic access.
- Technical menu: statistics for technicians.
- Easy access to components.

OTHERS
- Grey skinplate cabinet, stainless steel effect.
- SOFT TOUCH - Drum with recessed perforations.
- COOL DOWN - Cooling at the end of the cycle.
- Available in electric, gas or steam heating.
- CE approved.

OPTIONS

- Humidity control.
- Double glass door.
- FIRE KARE - Fire protection system. Opposite door opening.
- Tropicalised model.
- Dosing system - perfume spraying.
- Rear panel external air inlet + filter.
- Debris filter with 0.6 mm mesh (standard is 0.3 mm).
- Debris filter with 1.2 mm mesh (standard is 0.3 mm).
- Stainless steel cabinet.
- Stainless steel front panel.
- Stainless steel steam coil.
- Low pressure steam coil.
- Wooden packaging.
- Different voltage options available.
- Self-service payment systems.

	U.	SR-28 TP2	SR-35 TP2
CAPACITY			
Capacity 1/18	Kg	30,6	36,7
	Lb	67,3	80,8
Capacity 1/20	Kg	27,5	33
	Lb	60,6	72,8
DRUM			
Ø Drum	mm	947	947
	inch	37,28	37,28
Drum length	mm	780	936
	inch	30,71	36,85
Drum volume	l	550	660
	cu ft	19,42	23,3
Ø Door	mm	802	802
	inch	31,57	31,57
Floor to door center	mm	1.040	1.040
	inch	40,94	40,94
Floor to lower part of the door	mm	578	578
	inch	22,74	22,74
Drum motor power	kW	0,55	0,55
ELECTRIC POWER			
Installed heating power	kW	30	36
Installed electrical power	kW	31,15	37,15
Evaporation capacity	l/h	26,1	31,1
	USgallon/h	6,89	8,22
Hourly output	Kg/h	48,4	60
	Lb/h	106,7	132,28
GAS POWER			
Installed heating power gas	Kcal/h	35254	35254
	Btu/h	139899	139899
Installed heating power gas	kW	41	41
Installed electrical power	kW	1,15	1,15
Instant propane gas consumption (G31)	Kg/h	3,51	3,51
	Lb/h	7,74	7,74
Instant natural gas consumption (G20)	m³/h	4,34	4,34
	cfm	2,55	2,55
Evaporation capacity	l/h	30,9	32,1
	USgallon/h	8,16	8,48
Hourly output	Kg/h	59,3	63,9
	Lb/h	130,73	140,87
Ø Gas inlet	BSPP ISO 228-1	1/2"	1/2"
STEAM POWER			
Installed heating power steam	kW	50,1	50,1
	Btu/h	170948	170948
Installed electrical power	kW	1,15	1,15
Steam consumption (8 barG) - Stándar	Kg/h	89	89
Steam consumption (116 psiG)	Lb/h	107,2	107,2
Steam pressure - Standard	barG	6 - 9	6 - 9
	psiG	87 - 130.5	87 - 130.5
Steam inlet - steam outlet - Standard	BSPT- ISO7.1	1"	1"
Steam inlet - condensate oulet	NPT ANSI B1.20.1 Tapered	1"	1"
Steam consumption (5 bagG) - Low pressure	Kg/h	93	93
Steam consumption (72,5 psiG) - Low pressure	Lb/h	112	112
Steam pressure - Low Pressure	barG	3 - 6	3 - 6
	psiG	43.5 - 95	43.5 - 97
Steam Inlet - Steam Outlet - Low Pressure	BSPT - ISO7.1	1 1/2"	1 1/2"

VENTILATION					
Nominal air flow	m³/h	1.200		1.200	
	cfm	706		706	
Air outlet Ø	mm	200		200	
	inch	7,87		7,87	
Fan motor power	kW	0,55		0,55	
HEAT DISSIPATION					
Total max heat dissipation	kW	3		3,6	
	Btu/h	10242		12291	
Front pannel max heat dissipation	kW	2,1		2,5	
	Btu/h	7170		8604	
CONNECTIONS		ELECTRICAL	STEAM / GAS	ELECTRICAL	STEAM / GAS
Tension 230V - I + N + T	Nº x mm2 / A	-	3x1.5 / 16 A	-	3x1.5 / 16 A
Tension 230V - III + T	Nº x mm2 / A	4 x 35 / 100 A	3x1.5 / 16 A	4 x 50 / 125 A	3x1.5 / 16 A
Tension 400V - III + N + T	Nº x mm2 / A	5 x 16 / 63 A	3x1.5 / 16 A	5 x 16 / 63 A	3x1.5 / 16 A
DIMENSIONS / PACKING DIMENSIONS					
Net width / Gross width	mm	985 / 1.065		985 / 1065	
	inch	38,78 / 41,93		38,78 / 41,93	
Net depth / Gross depth	mm	1.054 / 1.154		1.210 / 1.310	
	inch	41,5 / 45,43		47,64 / 51,57	
Net height / Gross height	mm	1.975 / 2.080		1.975 / 2.080	
	inch	77,76 / 81,89		77,76 / 81,89	
Net weight / Gross weight	Kg	230 / 260		260 / 285	
	Lb	507,06 / 573,2		573,20 / 628,32	
OTHERS					
Sound level	dB	65		65	

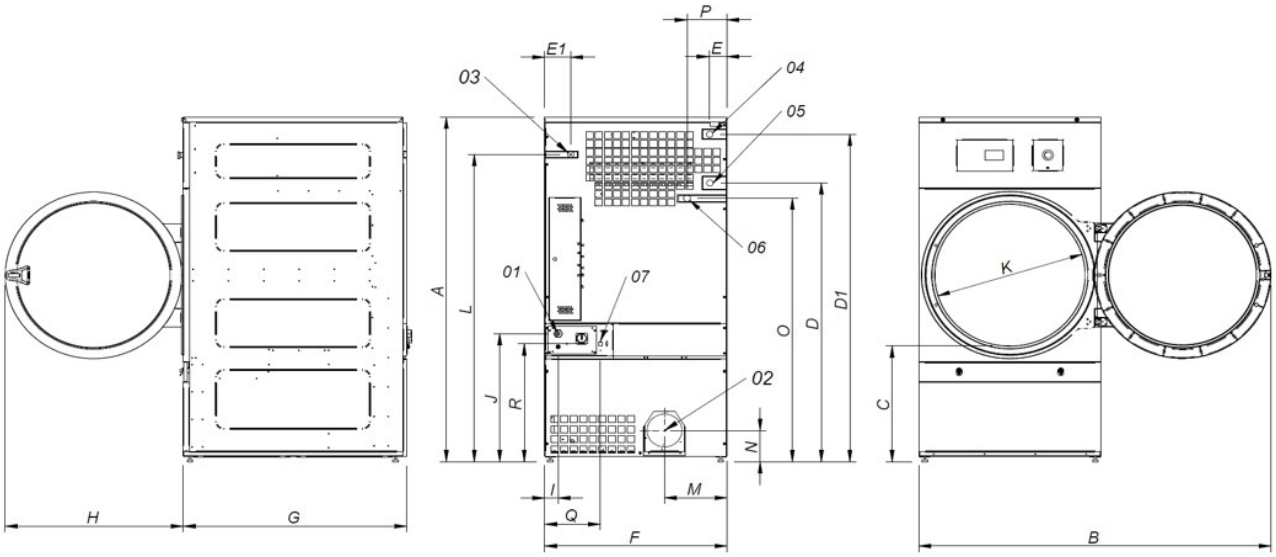

01. Electrical connection
02. Vapour outlet Ø200
03. Gas inlet 1/2".
04. Steam inlet 1".
05. Condensate outlet 1".
06. Fire valve 3/4".
07. Ethernet connection (only available on models with TP2 control)

	A	B	C	D	D1	E	E1	F	G	H	I	J	K	L	M	N	O	P	Q	R
SR-28 TP2	1975	1910	660	1590	1875	102	141	985	1054	970	70	730	802	1768	337	178	1510	215	301	676
SR-35 TP2	1975	1910	660	1590	1875	102	141	985	1210	970	70	730	802	1768	337	178	1510	215	301	676

DRYING

—

SINGLE POCKET DRYERS
ADVANCE
SR-45/60/80 TP2

CHARACTERISTICS

TP2
- 7" colour touch screen, programmable and easy to use.
- USB connection. Includes online platform for programming, telemetry, data analysis... via IoT.
- On-screen videos: announcements, instructions (useful for self-service).
- 37 languages.

OUTSTANDING FEATURES
- FREQUENCY INVERTER - Standard inversion of rotation.
- STAINLESS DRUM - Standard stainless steel drum.
- Standard frequency inverter.

EFFICIENCY
- MIXED FLOW - Axial-radial airflow system.
- EFFICIENT AIRFLOW - Large debris filter.

VERSATILITY
- Tailor-made - Customisation.
- WET CLEANING.

CONNECTIVITY
- IoT FagorKonnect standard.

ERGONOMICS
- Stainless steel filter drawer.
- Large door diameters.
- Door opening direction reversal.
- 180º opening hinges.

MAINTENANCE
- Easy and ergonomic access.
- Technical menu: statistics for technicians.
- Easy access to components.

OTHERS
- Grey skinplate cabinet, stainless steel effect.
- New: geared motor transmission on SR-45/60/80 models.
- SOFT TOUCH - Drum with recessed perforations.
- COOL DOWN - Cooling at the end of the cycle.
- Available in electric, gas or steam heating.
- CE approved.

OPTIONS

- Automatic (double glazed) or manual guillotine door.
- Front tipping kit.
- Humidity control.
- Double glass door.
- FIRE KARE - Fire protection system.
- Opposing door opening.
- Tropicalised model.
- Dosing system - perfume spraying.
- Rear panel external air inlet + filter.
- Debris filter with 0.6 mm mesh (standard is 0.3 mm).
- Debris filter with 1.2 mm mesh (standard is 0.3 mm).
- Stainless steel cabinet.
- Stainless steel front panel.
- Low pressure steam battery.
- Wooden packaging.
- Different voltage options available.

	U.	SR-45 TP2	SR-60 TP2	SR-80 TP2
CAPACITY				
Capacity 1/18	Kg	50	66,7	83,3
	Lb	110,2	146,9	183,6
Capacity 1/20	Kg	45	60	75
	Lb	99,2	132,3	165,3
DRUM				
Ø Drum	mm	1.225	1.225	1.225
	inch	48,23	48,23	48,23
Drum length	mm	760	1.020	1.252
	inch	29,92	40,16	49,29
Drum volume	l	900	1.200	1.500
	cu ft	31,78	42,37	52,95
Ø Door	mm	802	802	802
	inch	31,57	31,57	31,57
Floor to door center	mm	1.275	1.275	1.275
	inch	50,20	50,20	50,2
Floor to lower part of the door	mm	813	813	813
	inch	31,99	31,99	31,99
Drum motor power	kW	0,75	1,1	1,5
ELECTRIC POWER				
Installed heating power	kW	54	72	72
Installed electrical power	kW	55,9	74,25	74,65
Evaporation capacity	l/h	40,2	60,2	64
	USgallon/h	10,62	15,9	16,91
Hourly output	Kg/h	80,4	120	128,6
	Lb/h	177,25	264,55	283,51
GAS POWER				
Installed heating power gas	Kcal/h	51591	77386	103181
	Btu/h	204728,5	307092,7	409456,9
Installed heating power gas	kW	60	90	120
Installed electrical power	KW	1,9	2,25	2,65
Instant propane gas consumption (G31)	Kg/h	5,14	7,71	10,28
	Lb/h	11,33	17	22,66
Instant natural gas consumption (G20)	m³/h	6,35	9,53	12,71
	cfm	3,74	5,61	7,48
Evaporation capacity	l/h	42,5	65,8	86,5
	USgallon/h	11,23	17,38	22,85
Hourly output	Kg/h	84,4	128,6	173,1
	Lb/h	186,07	283,51	381,61
Ø Gas inlet	BSPP ISO 228-1	3/4"	3/4"	3/4"
STEAM POWER				
Installed heating power steam	kW	91	128	128
	Btu/h	310505	436754	436754
Installed electrical power	kW	1,9	2,25	2,65
Steam consumption (8 barG) - Stándar	Kg/h	121	171	171
Steam consumption (116 psiG)	Lb/h	145,8	206	206
Steam pressure - Standard	barG	7 - 12	7 - 12	7 - 12
	psiG	101.5 - 174	101.5 - 176	101.5 - 178
Steam inlet - steam outlet - Standard	BSPT- ISO7.1	1"	1"	1"
Steam inlet - condensate oulet	NPT ANSI B1.20.1 Tapered	1"	1"	1"
Steam consumption (5 bagG) - Low pressure	Kg/h	142	147	147
Steam consumption (72,5 psiG) - Low pressure	Lb/h	171,1	177,1	177,1
Steam pressure - Low Pressure	barG	4 - 7	4 - 7	4 - 7
	psiG	58 - 101.5	58 - 101.5	58 - 101.5
Steam Inlet - Steam Outlet - Low Pressure	BSPT - ISO7.1	1" 1/2	1" 1/2	1" 1/2

THERMAL OIL							
Installed heating power	kW	91		128		128	
Installed electrical power	kW	1,9		2,25		2,65	
Fluid consumption (T max175ºC)	m³/h	7		10		10	
Connections thermal oil	BSP	1" 1/2		1" 1/2		1" 1/2	
VENTILATION							
Nominal air flow	m³/h	3000		3000		3000	
	cfm	1766		1766		1766	
Air outlet Ø	mm	300		300		300	
	inch	11,81		11,81		11,81	
Fan motor power	kW	1,1		1,1		1,1	
HEAT DISSIPATION							
Total max heat dissipation	kW	4,9		6,5		6,5	
	Btu/h	16593		22124		22124	
Front pannel max heat dissipation	kW	2,2		2,9		2,9	
	Btu/h	7375		9833		9833	
CONNECTIONS		ELECTRICAL	STEAM / GAS	ELECTRICAL	STEAM / GAS	ELECTRICAL	STEAM / GAS
Tension 230V - I + N + T	Nº x mm2 / A	-	-	-	-	-	-
Tension 230V - III + T	Nº x mm2 / A	-	4x2.5 / 20 A	-	4x2.5 / 25 A	-	4x2.5 / 25 A
Tension 400V - III + N + T	Nº x mm2 / A	5 x 35 / 100 A	5x2.5 / 20 A	5 x 50 / 125 A	4x2.5 / 25 A	5 x 50 / 125 A	5x2.5 / 25 A
DIMENSIONS / PACKING DIMENSIONS							
Net width / Gross width	mm	1.270 / 1.330		1.270 / 1.330		1.270 / 1.330	
	inch	50 / 52,36		50 / 52,36		50 / 52,36	
Net depth / Gross depth	mm	1.106 / 1.185		1.366 / 1.455		1.598 / 1.705	
	inch	43,54 / 46.65		53,78 / 57,28		62,91 / 67,13	
Net height / Gross height	mm	2.380 / 2.200		2.380 / 2.200		2.380 / 2.200	
	inch	93,70 / 86,61		93,7 / 86,61		93,7 / 86,61	
Net weight / Gross weight	Kg	395 / 430		529 / 575		657 / 715	
	Lb	870,83 / 947,99		1.166,25 / 1.267,66		1.448,44 / 1.576,31	
OTHERS							
Sound level	dB	67		67		67	

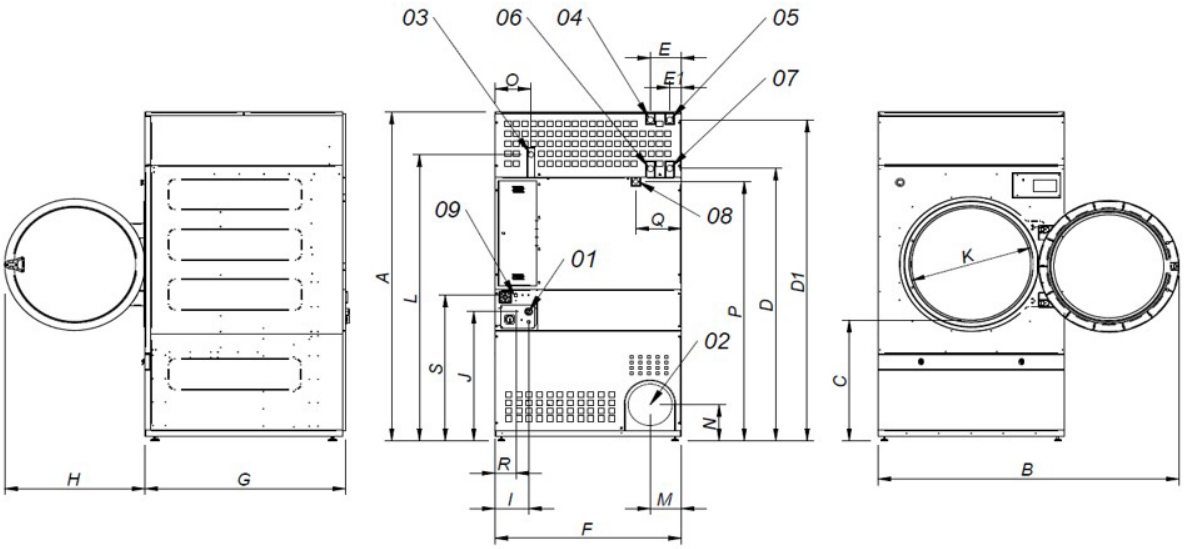

01. Electrical connection
02. Vapour outlet Ø300
03. Gas inlet 3/4".
04. Steam inlet 1" (SR-45)
05. Steam inlet 1" (SR-60/80)
06. Condensate outlet 1" (SR-45)
07. Condensate outlet 1" (SR-60/80)
08. Anti-fire valve 3/4".
09. Ethernet connection (only available in models with TP2 control)

	A	B	C	D	D1	E	E1	F	G	H	I	J	K	L	M	N	O	P	Q	R	S
SR-45 TP2	2380	2045	874	1981	2311	211	80	1270	1106	956	248	935	802	2088	214	240	244	1841	308	160	1053
SR-60 TP2	2380	2045	874	1981	2311	211	80	1270	1366	956	248	935	802	2088	214	240	244	1841	308	160	1053
SR-80 TP2	2380	2045	874	1981	2311	211	80	1270	1598	956	248	935	802	2088	214	240	244	1841	308	160	1053